Yoswit Smart Curtain Switch Datasheet

Model: YO2086s-1GK (R2W)-MEC-A

Revised: 01-12-2024



Elevate Your Home with Intelligent Comfort

Yoswit Smart Curtain Switch is compatible with traditional AC curtain motors. Relays are used to control the rotation of the curtain motors, enabling personalized opening percentage according to individual preferences. Enjoy various scene modes and the built-in timer allows convenient scheduling and control of your curtains for enhanced convenience. It offers compatibility with various third-party smart home systems and integrates smoothly with smart speakers. With its built-in WiFi serving as a central gateway, it seamlessly connects with other Yoswit products, empowering remote management of both Yoswit products and curtains through our Yoswit App, simplifying the interaction with your smart devices.

Connection 1: Dry contact (Strong electric)

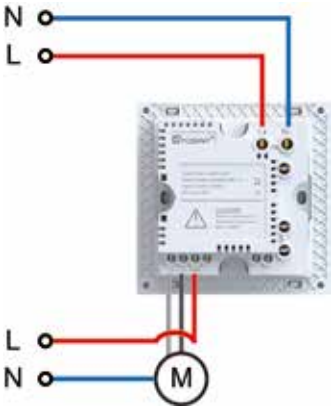

Connection 2: Dry contact (Week electric)

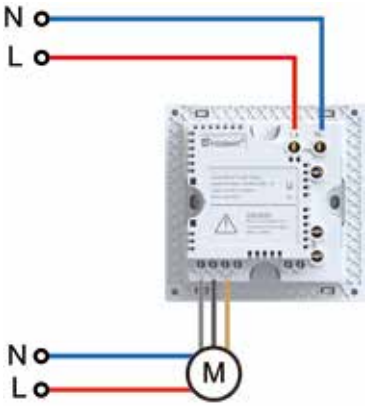

Key Features and Benefits

- Compatibility with traditional AC curtain motors
- Personalized curtain opening percentages
- Various scene modes for customized experiences
- Built-in timer for automation
- Central hub for smart devices
- Bluetooth Mesh & Wifi enhance connectivity and extend range
- Third-party smart home systems compatibility
- OTA remote upgrades

Various Customized Products

We offer a comprehensive selection of smart home products that are seamlessly adapted to the usage standards and various socket types in different countries, ensuring a smooth installation process for all users. With extensive compatibility, our products enable you to control a diverse range of household appliances, including lighting, air conditioning, and TV.

Light Switch | Dimmer Switch | 2 Way Switch | Double Pole Switch | Gate Controlled Switch | Hidden Controlled Switch | Outlet | Roller | Curtain | Remote Control | Thermostat

Yoswit App

You can download our app to implement the following functions via Bluetooth and WiFi to control the Yoswit switches.

Time Setting | Scene Mode | Device Network | Away Detection | Password Protection

Network Control | Apple Siri | Google Assistant | IFTTT

Depends on Yoswit Bridge Solutions.

SCAN THE QR CODE TO DOWNLOAD YOSWIT APP

Product Specifications

Color Options:

*You can also customize the colors



Specifications:

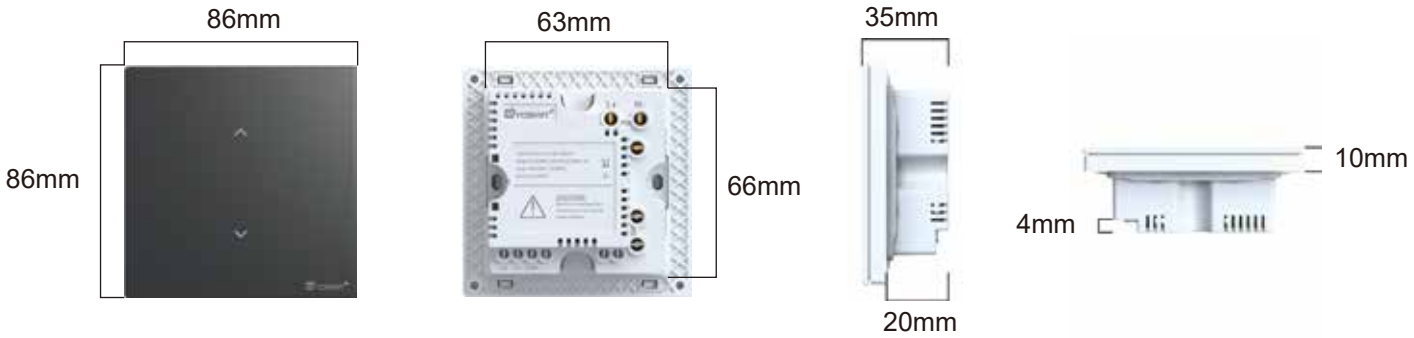

Electrical	
Operation Power	100-240V AC (50/60Hz)
Power Consumption	<1W
Max. Load	440W

Wireless	
Frequency	2.4GHz
Connection	Wifi 2.4G / BLE 4.2
Range	Open Area: >50m / Interior: 3-20m

General Specifications

Product Name	Yoswit Smart Curtain Switch
Model	YO2086s-1GK (R2W)-MEC-A
Socket Type	Socket 86
EAN / UPC	EAN: 0765756497848 / UPC: 765756497848
Revision	V7.0
Compliance	CE, FCC, RoHS
Manufacturer	Designed by Yoswit in Hong Kong, China / Assembled in Guangdong, China
Warranty	Two Year Limited Warranty (*Details available on the Product Warranty and Limitations of this datasheet)

Mechanical

Operating Temperature	-10°C to 40°C
Operating Humidity	0-95% RH, Non-Condensing
Operating Environment	Interior
Operation	APP / Manual
Ingress Protection (IP)	20

Product Package

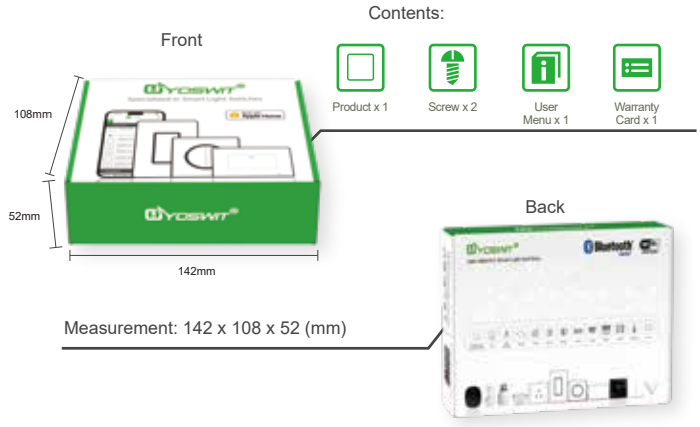

Outer Box



Quantity Per Box: 40 Pack / Box
Measurement: 58 x 31 x 23.5 (cm)

Product Warranty and Limitations

Yoswit brand products guarantee for a period of 2 years warranty from the date of purchase. During the warranty period and in the event that a defective product is identified (non-human factors), Yoswit will provide free maintenance. Damage beyond the warranty period or caused by improper use is not covered within the warranty, Yoswit will not bear any responsibility for repair, and will still provide users with a lifelong maintenance of paid services. If the products need to be repaired or returned to our company, an appropriate fee should be charged based on specific situation to cover the cost of replacement. Regardless of the warranty status, all shipping costs are borne by users.

LINCOGN TECHNOLOGY CO. LIMITED

Address: Room 202, 2/F, Building No. 19 West Science and Technology Avenue, Science Park, Shatin, N.T., Hong Kong
info@yoswit.com | Tel: (852) 3996 9396 | Fax: (852) 3119 8778 | www.yoswit.com